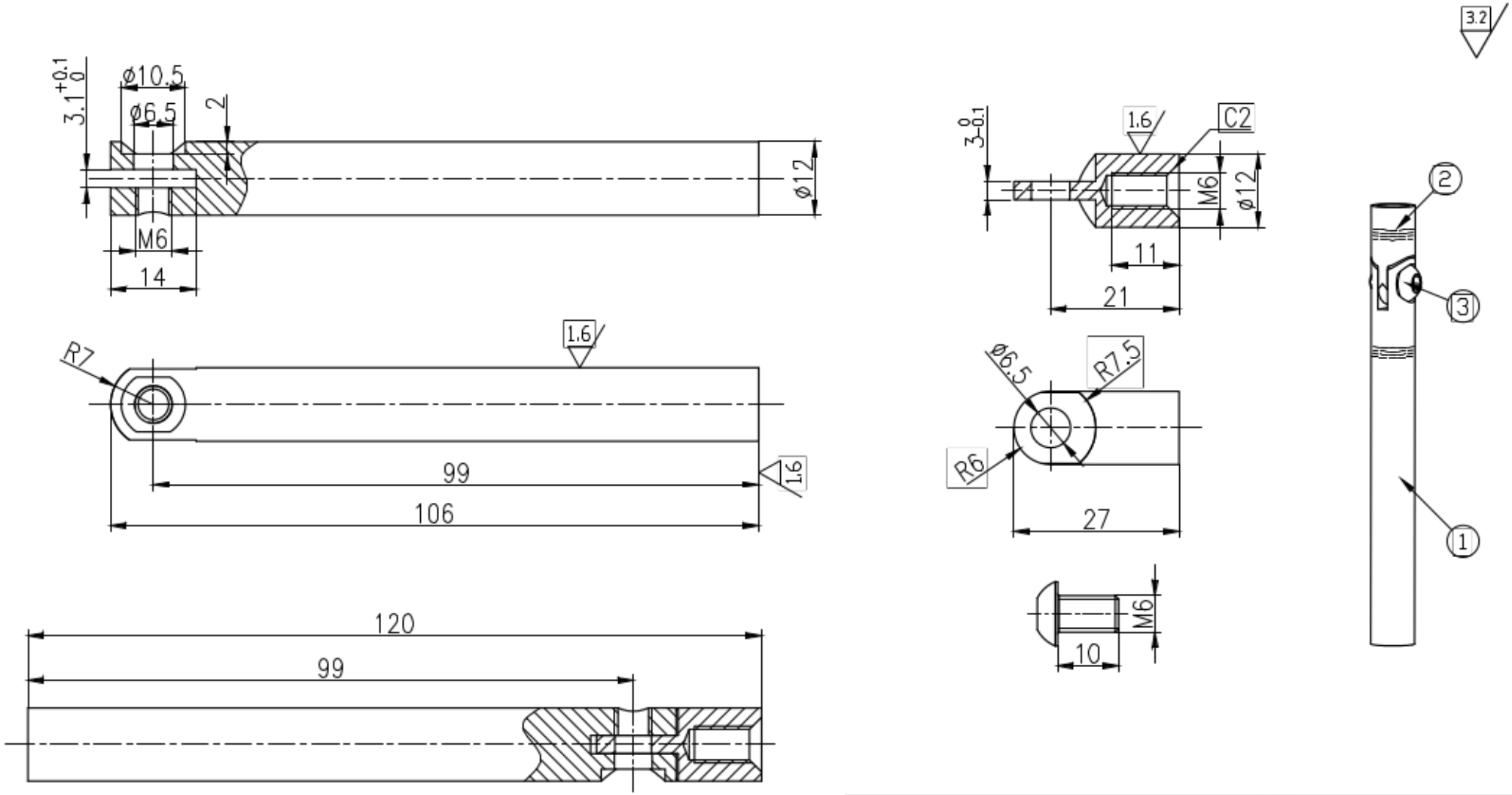

1	712.12.120.02-1		1
2	712.12.120.02-2		1
3	DIN 7380 M6X10	M6X10	1

	0.5-6	>6-30	>30-120	>120-400	>400-1000	>1000-2000	10	>10-50	>50-120	>120-400
	±0.1	±0.2	±0.3	±0.5	±0.8	±1.2	±1°	±30'	±20'	±10'

AISI 304

S 1:1

100.0695